-
-
-
-
-
-

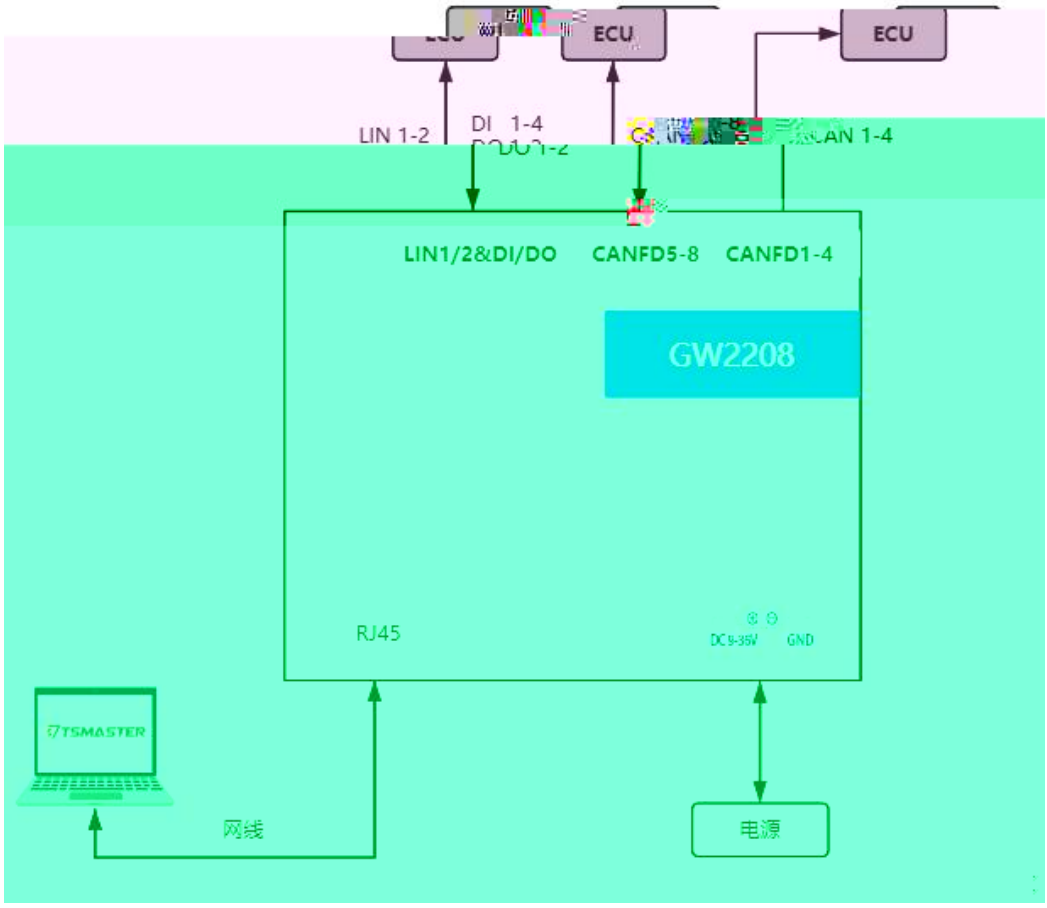
ECU
ECU
LIN 1-2
DI 1-4
CAN 1-4
LIN1/2&DI/DO
CANFD5-8
CANFD1-4
GW2208
RJ45
DC 9-35V
GND
TSMASTER
网线
电源

-
-
-
-

工具
帮助
DBC DataFiles ForTesting 6
GSM
EPS
ECM
DIAG_TEST
DCTM
BCM
节点
VEHICLE_SPEED_OF
100
0x0A28A000
CAN 扩展帧

诊断
On
诊断流程
值

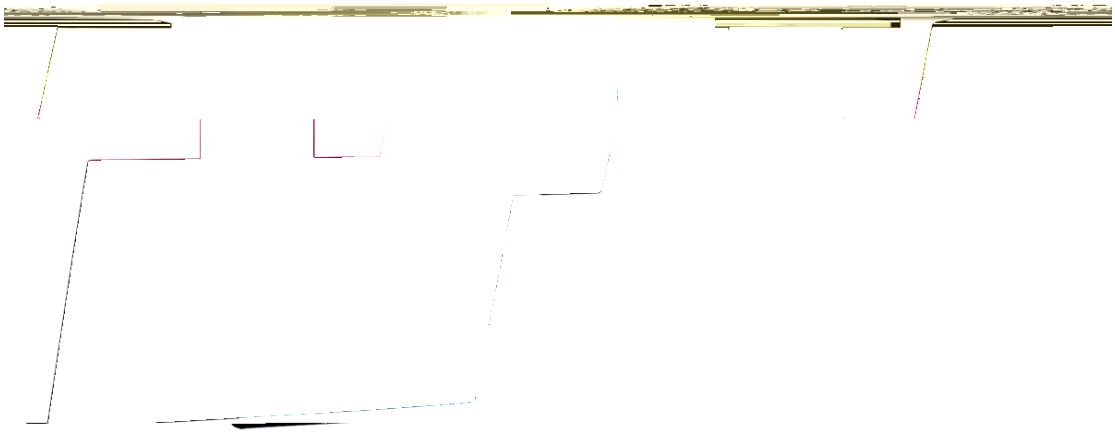

LIN 1/2 & DI/DO
CANFD 5-8
CANFD 1-4
TOSUN
GW2208
CANFD 1
CANFD 5
CANFD 2
CANFD 6
CANFD 3
CANFD 4
CANFD 8
ETH

- ✓
- ✓
- ✓
- ✓
- ✓
- ✓
- ✓
- ✓
- ✓
- ✓
- ✓
- ✓
- ✓
- ✓
- ✓

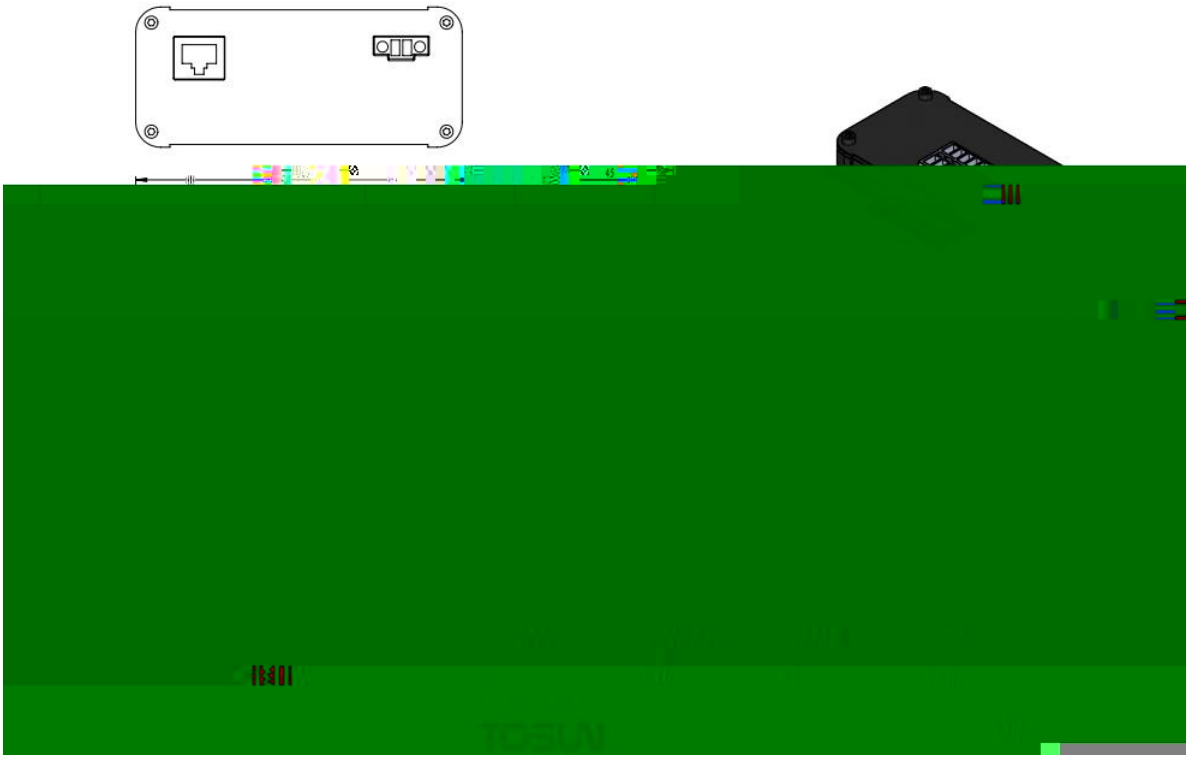

✓

TOSUN
GW

✓

CANFD 1-4
CANFD 5-8
LIN 1/2 & DI/DO

ETH
DC 9-36V
GND

➢

➢

➢

➢

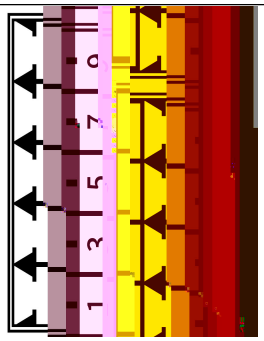				

➢

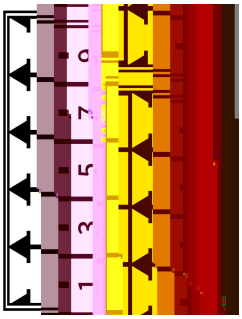				

➢

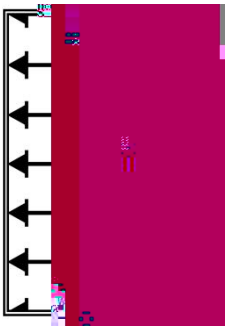				

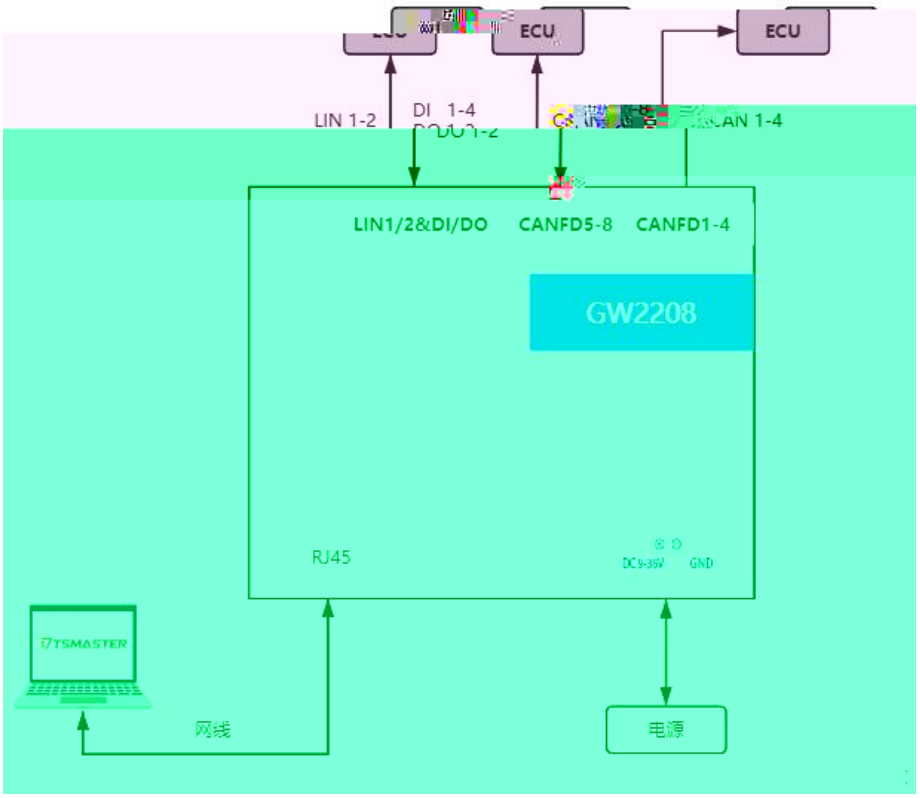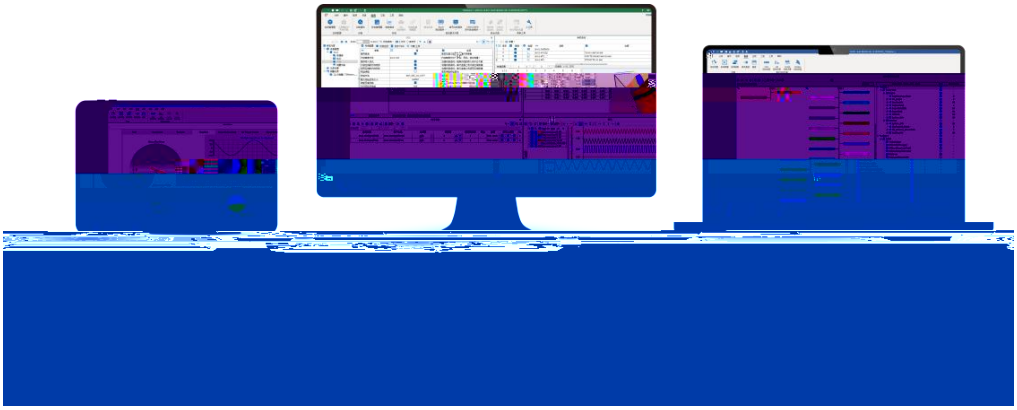
ECU
ECU
LIN 1-2
DI 1-4
CAN 1-4
LIN1/2&DI/DO
CANFD5-8
CANFD1-4
GW2208
RJ45
DC9-36V
GND
TSMASTER
网线
电源